Visit

FREETESTPAPER.com

for more papers

Website: freetestpaper.com

Facebook.com/freetestpaper

Twitter.com/freetestpaper

Name: ....( ) Class: Sec .....

St. Gabriel's Secondary School

2017 Second Semestral Examination

Subject : **Mathematics**
Paper : **1**
Level/Stream : **Sec 2 Express**
Duration : **1 hour 15 minutes**
Date : **4 October 2017**
Setter(s) : **Mdm Lai Angel**

READ THESE INSTRUCTIONS FIRST

Write your name, class and register number on all the work you hand in.
Write in dark blue or black pen.
You may use a pencil for any diagrams or graphs.
Do not use staples, paper clips, glue or correction fluid.

Answer **all** the questions.
If working is needed for any question, it must be shown with the answer.
Omission of essential working will result in loss of marks.
The use of an approved scientific calculator is expected, where appropriate.
If the degree of accuracy is not specified in the question, and if the answer is not exact, give the answer to 3 significant figures. Give answers in degrees to 1 decimal place.
For π, use either your calculator value or 3.142, unless the question requires the answer in terms of π.

The number of marks is given in brackets [ ] at the end of each question or part question.

The total number of marks for this paper is 50.

For Examiner's Use		
Subtotal		
Number of marks deducted for 'P' (capped at 3)		50

This question paper consists of **11** printed pages including this cover page.

Answer **all** the questions.

1 (a) Round 9.8765 correct to 1 significant figure.

Answer ..... [1]

(b) Write the following in order of size, largest first.

$$0.5,\ 0.5^3,\ \sqrt[3]{0.5},\ \frac{5}{7}$$

Answer ....., ..., ..., ... [1]
largest smallest

---

2 Mr Koh has a new motorbike. The capacity of the motorbike's petrol tank and the petrol consumption stated by the manufacturer are as follows.

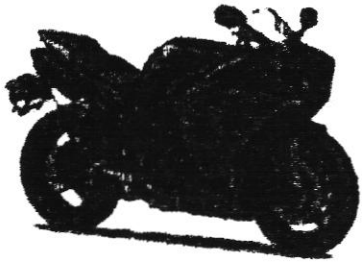

Capacity of petrol tank : 20 litres Petrol consumption (Amount of petrol used) : 7.0 litres/100 km

Mr Koh started his journey on his motorbike with a full tank of petrol. After riding for 200 km, he refuelled the petrol tank completely by pumping 16 litres of petrol.

Find

(a) the amount of petrol left in the petrol tank after Mr Koh had completed 200 km,

Answer ..... litres [1]

(b) the actual petrol consumption of Mr Koh's motorbike.

Answer ..... litres/100 km [1]

3 (a) Factorise $2x^2+13x+15$.

Answer ..... [1]

(b) Hence, **without using a calculator**, write down the two factors of 21 315.

Answer ..... and ..... [2]

---

4 Express each of the following as a single fraction in its simplest form.

(a) $\frac{2x+1}{3}-\frac{x}{5}$

Answer ..... [1]

(b) $\frac{6}{x^2-4}-\frac{3}{x-2}$

Answer ..... [2]

---

5 If $m : n = 2 : 5$ and $n : p = 2 : 5$, show that $\frac{m+n+p}{p} = \frac{39}{25}$.

Answer

[3]

---

6 It is given that y is inversely proportional to the square root of x. The difference in the value of y when $x = 4$ and $x = 9$ is 3.

Find

(a) an equation connecting x and y,

Answer ..... [2]

(b) the value of x when $y = 3$.

Answer $x =$ ..... [1]

7

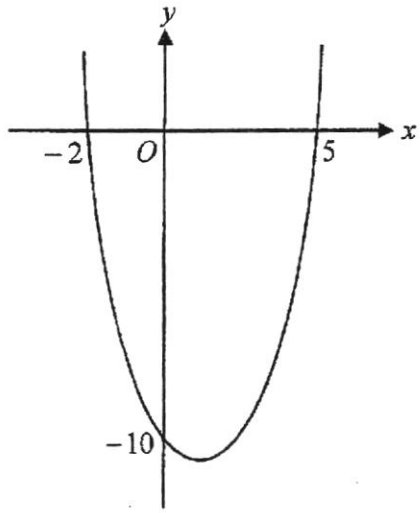

The diagram shows the graph of $y = x^2 + bx - 10$.

Find

(a) the value of b,

Answer $b =$ ..... [2]

(b) the coordinates of the minimum point of the graph.

Answer (..... , ...) [2]

8 **(a)** Factorise $12x^2 - 6xy - 20wx + 10wy$.

Answer ..... [2]

(b) Expand $(7+5y)^2 - (7-5y)^2$.

Answer ..... [2]

9

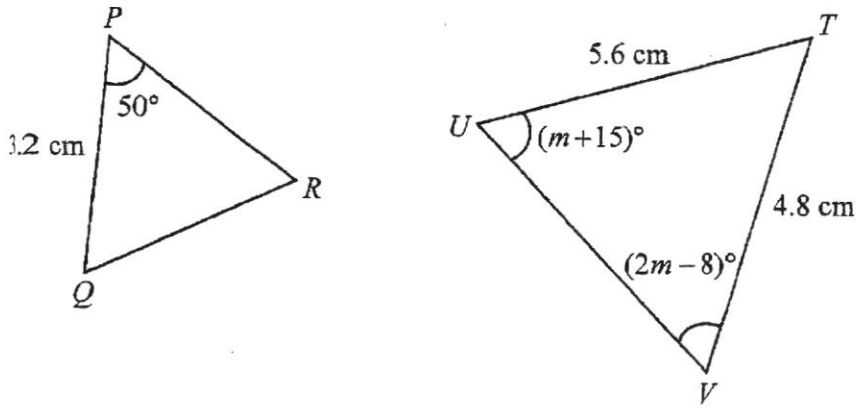

In the diagram, triangle PQR is similar to triangle TUV.
Angle $QPR = 50°$, angle $TUV = (m+15)°$ and angle $UVT = (2m-8)°$.
$PQ = 3.2$ cm, $TU = 5.6$ cm and $TV = 4.8$ cm.

(a) Calculate the value of m.

Answer $m =$ ..... [2]

(b) Find the length of PR.
Give your answer correct to 1 decimal place.

Answer $PR =$ ..... cm [2]

(c) A student, Sam, thinks that since triangle PQR is similar to triangle TUV, therefore the area of triangle PQR : area of triangle TUV is 16 : 49.
Explain if Sam is correct. Show working to support your answer.

Answer .....

.....

.....

.....

..... [1]

10 Daniel is x years old and Gabriel is y years old.
The sum of ages of Daniel and Gabriel is 30 years old.

(a) Form an equation connecting x and y.

Answer ..... [1]

(b) One year ago, Gabriel was three times as old as Daniel.
Form another equation connecting x and y and express it in the simplest form.

Answer ..... [1]

(c) Draw the graphs of the two equations in **parts (a)** and **(b)** on the grid below.

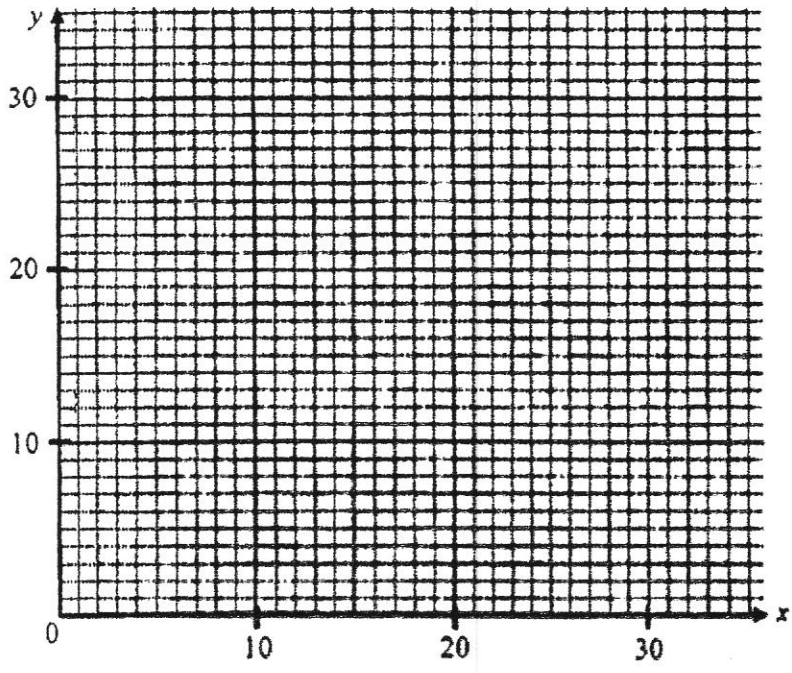

[2]

(d) From the graphs, find the ages of Daniel and Gabriel.

Answer Daniel: ..... years old

Gabriel: ..... years old [1]

11 The diagram shows an empty container with height 1.7 m.
It consists of a cylindrical drum and a hemispherical base of radius 0.5 m.

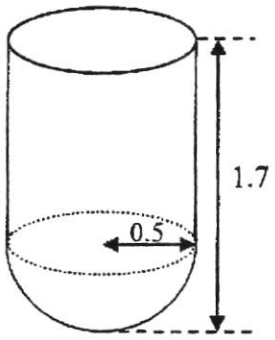

(a) Taking $\pi = \frac{22}{7}$, find the volume of the container.

Answer ..... m^3 [3]

(b) The container is filled with water at a rate of 70 litres per minute.
Given that 1 m^3 = 1000 litres, find the time needed for the water to fill the container completely.

Answer ..... min [2]

12 The dot diagram shows the marks scored by x students for a Mathematics quiz.

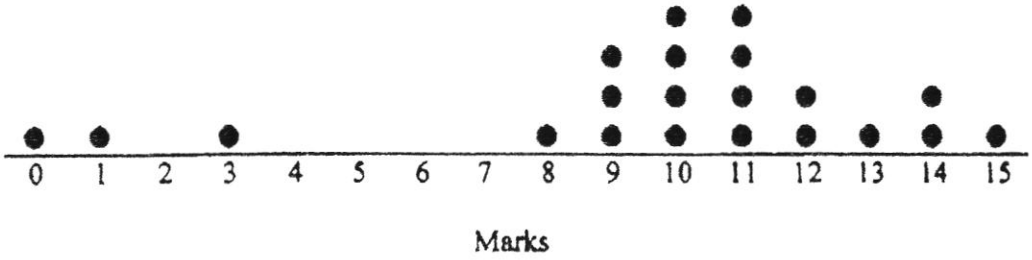

(a) Find the value of x.

Answer $x =$ ..... [1]

(b) Write down the median mark.

Answer ..... [1]

(c) **(i)** Calculate the mean mark.
Give your answer correct to the nearest whole number.

Answer ..... [2]

(ii) Explain if the mean mark, in **part (b)(i)**, accurately reflects the results of all students in the class.

Answer .....

.....

.....

..... [1]

13

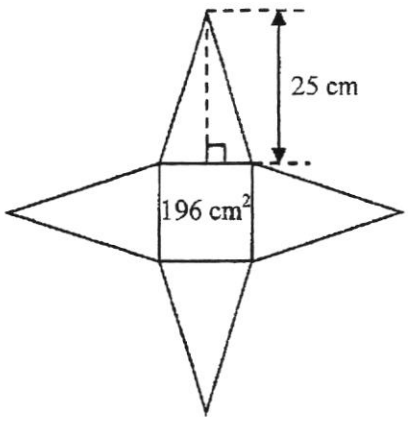

The diagram shows the net of a right square pyramid. The base area is 196 cm^2 and the height of the triangle is 25 cm.

Find

(a) the length of a side of the base,

Answer ..... cm [1]

(b) the surface area of the pyramid,

Answer ..... cm^2 [2]

(c) the volume of the pyramid.

Answer ..... cm^3 [3]

End of Paper

Answer **all** the questions.

1 A bag contains different-coloured sweets, of which 4 are orange, 5 are white, 6 are purple and 3 are green. A sweet is chosen at random from the bag.

Find the probability of choosing

(a) a purple sweet, [1]

(b) a sweet that is not green, [1]

(c) a pink sweet. [1]

2

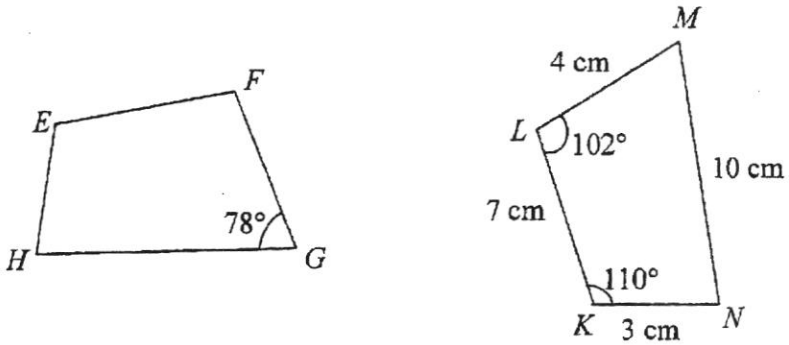

Quadrilateral *EFGH* is congruent to quadrilateral *KLMN*.

Find

(a) the length of *EF*, [1]

(b) angle *EHG*. [2]

---

3 Air from a hand pump is used to fill up a large spherical balloon. Each time when the pump is pressed, 360π cm^3 of air is pumped into the balloon. The pump was pressed 100 times to fully inflate the balloon.

(a) Find the radius of the balloon when it is fully inflated. [2]

(b) Calculate the surface area of the fully inflated balloon. [2]

---

4 The hourly Pollution Standard Index (PSI) in a city was measured over a period of ten hours on a particular day. The results were recorded in the table below.

Time	1 pm	2 pm	3 pm	4 pm	5 pm	6 pm	7 pm	8 pm	9 pm	10 pm
PSI	97	95	103	x	92	106	98	100	103	98

(a) Find the value of x such that the mean of the PSI is 99. [2]

(b) Find the smallest integer value of x such that the median of the PSI is 99. [1]

(c) Find the value of x such that the mode of the PSI is 103. [1]

5

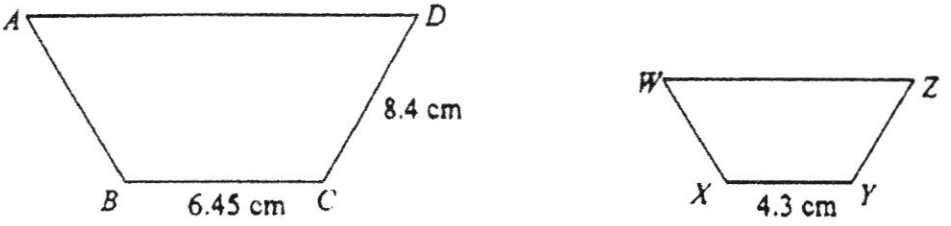

Trapezium $WXYZ$ is a reduction of trapezium $ABCD$. It is given that $BC = 6.45$ cm, $XY = 4.3$ cm and $CD = 8.4$ cm.

Find

(a) the scale factor of the reduction, [2]

(b) the length of ZY. [2]

6

Figure 1 Figure 2 Figure 3

The diagram shows a sequence of figures formed using stars of equal size.

(a) Draw Figure 4. [1]

(b) Write down an expression, in terms of n, for the number of stars in the Figure n. [2]

(c) There are 2986 stars in Figure K. Find the value of K. [2]

7

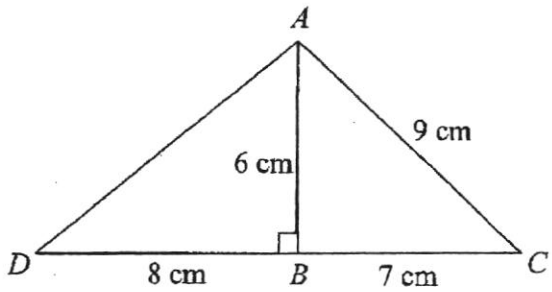

The diagram shows two triangles, ABC and ABD, which are not drawn to scale. $DB = 8$ cm, $AB = 6$ cm, $BC = 7$ cm and $AC = 9$ cm. AB is perpendicular to DB.

(a) Calculate angle BAD. [2]

(b) Determine if DBC is a straight line. Show your working clearly. [3]

---

8 A jungle explorer is planning an expedition. She investigates three possible routes.

(a) Write down an expression, in terms of v, for the number of days that she will take if she chooses

(i) route P, which is 600 km long and she expects to cover v km per day, [1]

(ii) route Q, which is the same distance as route P, but has more difficult terrain conditions and she would only expect to cover $(v - 5)$ km per day, [1]

(iii) route R, which is 120 km longer than route P, but has easier conditions and she would expect to cover $(v + 5)$ km per day. [1]

(b) She estimates that route R will take 24 days less than route Q.
Write down an equation in v to represent this information, and show that it reduces to

$$v^2 + 5v - 300 = 0.$$ [3]

(c) Solve the equation $v^2 + 5v - 300 = 0$. [3]

(d) Calculate the number of days she would need to complete route P. [2]

---

9 Answer the whole of this question on a sheet of graph paper.

The table below gives some values of x and the corresponding values of y, where

$$y = 2x^2 - 8x + 7.$$

x	-1	0	1	2	3	4	5
y	17	7	1	m	1	7	17

(a) Calculate the value of m. [1]

(b) Using a scale of 2 cm to represent 1 unit, draw a horizontal x-axis for $-1 \leq x \leq 5$.
Using a scale of 1 cm to represent 1 unit, draw a vertical y-axis for $-3 \leq y \leq 17$.

On your axes, plot the points given in the table and join them with a smooth curve. [3]

(c) From your graph, find the values of x when $y = 3$. [2]

(d) On your graph, draw the line of symmetry and write down its equation. [2]

(e) **(i)** On the same axes, draw the graph of $y = 2x - 1$ for $-1 \leq x \leq 5$. [1]

(ii) Hence, write down the coordinates of the points of intersection of the graphs $y = 2x^2 - 8x + 7$ and $y = 2x - 1$. [2]

End of Paper

SA2 2017 Sec 2 Express Mathematics Paper 1 Marking Scheme

Qn	Solution		
1a	10		
1b	$\sqrt[3]{0.5}$, $\frac{5}{7}$, 0.5, 0.5^3		
2a	Amount of petrol left = 4 litres		
2b	Actual petrol consumption = 8 litres / 100 km		
3a	$2x^2+13x+15$ $=(x+5)(2x+3)$		
3b	21 315 $=(100+5)[2(100)+3]$ $=105(203)$ $\therefore$ the two factors are 105 and 203.		
4a	$\frac{7x+5}{15}$		
4b	$\frac{6}{x^2-4}-\frac{3}{x-2}$ $=\frac{6-3x-6}{(x-2)(x+2)}$ $=-\frac{3x}{(x-2)(x+2)}$ or $-\frac{3}{x^2-4}$		
5	$n=\frac{5}{2}m$ … … …(1) or $\frac{m}{n}=\frac{2}{5}$ $n=\frac{2}{5}p$ … … …(2) or $\frac{m}{p}=\frac{2}{5}$ Sub (1) into (2), $\frac{5}{2}m=\frac{2}{5}p$ $\frac{m}{p}=\frac{4}{25}$		

[Turn over

Qn	Solution		
	$\frac{m+n+p}{p} = \frac{m}{p} + \frac{n}{p} + \frac{p}{p}$ $= \frac{4}{25} + \frac{2}{5} + 1$ $= \frac{39}{25}$		
6a	$y = \frac{k}{\sqrt{x}}$ where k is a constant $3 = \frac{k}{\sqrt{4}} - \frac{k}{\sqrt{9}}$ $k = 18$ $\therefore$ the equation is $y = \frac{18}{\sqrt{x}}$		
6b	$x = 36$		
7a	$y = (x+2)(x-5)$ $= x^2 - 3x - 10$ $\therefore$ b is -3.		
7b	x-coordinate: $\frac{-2+5}{2}$ $= \frac{3}{2}$ or $1\frac{1}{2}$ or 1.5 y-coordinate: Sub $x = 1.5$, $y = (1.5)^2 - 3(1.5) - 10$ $= -\frac{49}{4}$ or $-12\frac{1}{4}$ or -12.25 $\therefore$ coordinates of minimum point is $\left(\frac{3}{2}, -\frac{49}{4}\right)$.		
8a	$12x^2 - 6xy - 20wx + 10wy$ $= 6x(2x-y) - 10w(2x-y)$ $= 2(3x-5w)(2x-y)$		
8b	$(7+5y)^2 - (7-5y)^2$ $= [(7+5y)-(7-5y)][(7+5y)+(7-5y)]$		

Qn	Solution		
	$= 140y$		
9a	$180-(m+15)-(2m-8)=50$ $(\angle sum\ of\ \Delta)$ $m=41$		
9b	$\frac{PR}{TV}=\frac{PQ}{TU}$ $\frac{PR}{4.8}=\frac{3.2}{5.6}$ $PR=2.7\ cm$		
9c	Let h_1 and h_2 be the perpendicular heights to PQ and TU respectively. Since triangle PQR is similar to triangle TUV, ratio of corresponding sides = ratio of perpendicular heights. $\frac{Area\ of\ \Delta PQR}{Area\ of\ \Delta TUV}=\frac{0.5\times PQ\times h_1}{0.5\times TU\times h_2}$ $=\left(\frac{PQ}{TU}\right)^2$ $=\left(\frac{3.2}{5.6}\right)^2$ $=\left(\frac{4}{7}\right)^2$ $=\frac{16}{49}$ $\therefore$ Sam is correct to think that the area of triangle PQR : area of triangle TUV is 16:49.		
10a	$x+y=30$ or $y=-x+30$		
10b	$y=3x-2$		

Qn	Solution		
10c	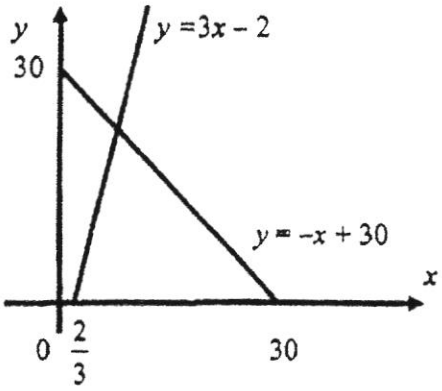		
10d	Daniel is 8 years old. Gabriel is 22 years old.		
11a	Volume of container = Volume of cylinder + Volume of hemisphere = $\frac{1}{2}\times\frac{4}{3}\times\frac{22}{7}\times 0.5^3 + \frac{22}{7}\times 0.5^2\times(1.7-0.5)$ $= \frac{253}{210}\text{ m}^3$		
11b	$70\,l \rightarrow 1$ min $1\,l \rightarrow \frac{1}{70}$ min $\frac{253}{210}\times 1000\,l \rightarrow \frac{1}{70}\times\frac{253}{210}\times 1000$ min $\frac{25300}{21}$ l → 17.2 min (3 s.f.) or $17\frac{31}{147}$ min ∴ it takes 17.2 min to fill the container fully.		
12a	$x = 21$		
12b	Median mark = 10		
12c	Mean mark = [1(0)+1(1)+1(3)+1(8)+3(9)+4(10)+4(11) +2(12)+1(13)+2(14)+15] ÷ 21		

Qn	Solution		
	$= 203 \div 21$ $= 9.6666...$ $= 10$ (nearest whole no.)		
12d	The mean mark 10, in **part (b)(i)**, does not accurately reflects the results of all students in the class because there are three students whose scores of <u>0, 1 and 3 are extremely low/ extreme values.</u> OR The mean mark 10, in **part (b)(i)**, does not accurately reflects the results of all students in the class because the <u>distribution of scores of the class is not evenly spread out.</u>		
13a	Length of a side of the base $= 14$ cm		
13b	Total surface area of pyramid $= (4 \times \frac{1}{2} \times \sqrt{196} \times 25) + 196$ $= 896 \text{ cm}^2$		
13c	Volume of pyramid $= \frac{1}{3} \times 196 \times \sqrt{25^2 - \left(\frac{\sqrt{196}}{2}\right)^2}$ $= 1\,568 \text{ cm}^3$		

2017 SGSS MATHS 2E SA2 Paper 2
ANSWER & Marking Scheme

Q	No.	Solution		
1	(a)	P(a purple sweet) $= \frac{6}{18}$ $= \frac{1}{3}$		
	(b)	P(a sweet that is not green) $= \frac{15}{18}$ $= \frac{5}{6}$		
	(c)	P(a sweet is pink) = 0		
2	(a)	$EF = KL = 7\text{cm}$		
	(b)	$\angle EHG = \angle KNM$ $= 360° - 102° - 110° - 78°$ ($\angle$ sum of a quadrilateral = 360°) $= 70°$		
3	(a)	Volume of the balloon = $360\pi \times 100$ $\frac{4}{3}\pi r^3 = 36000\pi \text{ cm}^3$ $r^3 = \frac{36000\pi \times 3}{4\pi}$ $= 27000$ $r = \sqrt[3]{27000}$ $= 30 \text{ cm}$		
	(b)	Surface area of the balloon $= 4\pi(30)^2$ $= 11309.733552923$ $= 11300 \text{ cm}^2$ (3 s.f.)		
4	(a)	$\frac{97 + 95 + 103 + x + 92 + 106 + 98 + 100 + 103 + 98}{10} = 99$ $x + 892 = 990$ $x = 98$		
	(b)	$x = 100$		
	(c)	$x = 103$		
5	(a)	Scale factor $= \frac{4.3}{6.45}$		

Qn No		Solutions		
		$= \frac{2}{3}$		
	(b)	$\frac{ZY}{DC} = \frac{2}{3}$ $\frac{ZY}{8.4} = \frac{2}{3}$ $ZY = 5.6\text{ cm}$		
6	(a)	Figure 4		•
	(b)	No. of Stars $= 4 + 3(n-1)$ $= 4 + 3n - 3$ $= 3n + 1$		•
	(c)	$3K + 1 = 2986$ $3K = 2985$ $K = 995$		
7	(a)	$\angle BAD = \tan^{-1}\left(\frac{8}{6}\right)$ $= 53.1°$		
	(b)	$AB^2 + BC^2 = 6^2 + 7^2 = 85$ $AC^2 = 9^2 = 81$ Since $AB^2 + BC^2 \neq AC^2$, therefore by the **Converse of Pythagoras' Theorem**, it is not a right-angled Δ. Hence, DBC is **NOT** a straight line.		
8	(a) (i)	No. of days required for route $P = \frac{600}{v}$		
	(a) (ii)	No. of days required for route $Q = \frac{600}{v-5}$		
	(a) (iii)	No. of days required for route $R = \frac{720}{v+5}$		
	(b)	$\frac{600}{v-5} - \frac{720}{v+5} = 24$ $\frac{600(v+5) - 720(v-5)}{v^2 - 25} = 24$ $6600 - 120v = 24v^2 - 600$ $24v^2 + 120v - 7200 = 0$		

Qn No.		Solution		
		$v^2 + 5v - 300 = 0$ (shown)		
	(c)	$(v-15)(v+20) = 0$ $v = 15$ or $v = -20$		
	(d)	$v = -20$ (rejected) No. of days required for route $P = \frac{600}{15} = 40$		
9	(a)	$m = 2(2)^2 - 8(2) + 7$ $= -1$		
	(b)	**See attached graph below:** Correct points plotted Correct scale Smoothness of graph		
	(c)	$x = 0.6 \pm 0.1$ *or* $x = 3.4 \pm 0.1$ (Note: Exact answer is 0.59 or 3.41)		
	(d)	**See attached graph below:** Line $x = 2$ drawn $x = 2$		
	(e)(i)	**See attached graph below:** $y = 2x - 1$ drawn		
	(e)(ii)	(1,1) and (4,7)		

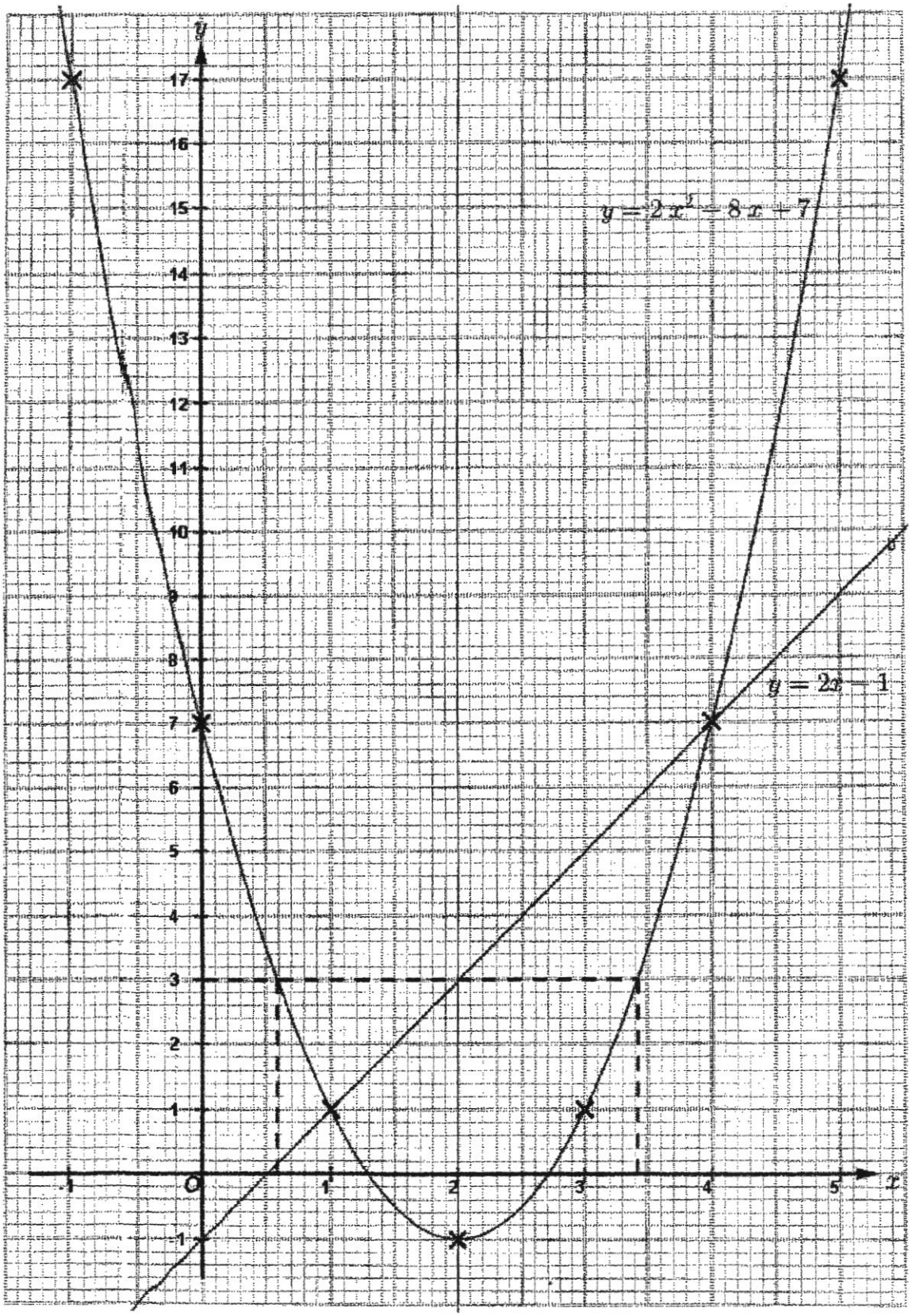
y
x
O
$y = 2x^2 - 8x + 7$
$y = 2x - 1$
17
16
15
14
13
12
11
10
9
8
7
6
5
4
3
2
1
-1
-1
1
2
3
4
5